Effect of the width of the exciting γ-ray spectrum on the average precession time of excited nuclei in a magnetic field

A. V. Davydov, M. M. Korotkov, and P. I. Romasheva
Institite of Theoretical and Experimental Physics

(Submitted 2 April 1980)
Pis'ma Zh. Eksp. Teor. Fiz. **31**, No. 10, 596–599 (20 May 1980)

The average precession time of ^{191}Ir nuclei in a magnetic field, which are excited by means of Mössbauer absorption of γ rays, exceeds the average lifetime of these nuclei in the excited state, which is defined as $\tau = \hbar/\Gamma$. Allowance for the width of the exciting γ-ray spectrum gives a g factor of the 129.4-keV level equal to 0.197 ± 0.018, in agreement with the data of other experiments.

PACS numbers: 23.20.Lv, 23.20.Ck, 76.80. + y

As was shown for the first time by Goebel and McVoy[1] and subsequently developed by Eicher[2] and Vishnevskiĭ *et al.*,[3] the perturbation by a magnetic field of the angular distribution (AD) of γ rays that are resonance scattered by nuclei depends significantly on the relation between the natural width Γ of the excited nuclear level and the characteristic width Δ of the exciting γ-ray spectrum. At low energy of magnetic hyperfine interaction, the perturbation effect reduces primarily to rotation of the rosette of the AD by an angle $\delta\theta = \kappa\Omega\tau$, where Ω is the Larmor frequency, $\tau = \hbar\Gamma$ is the average lifetime of nuclei in the excited state, and the coefficient κ depends on Δ, Γ, and the s-shift of the exciting γ-ray line relative to the location of the resonance. At $s = 0$, κ has the following values: 1) $\kappa = 1$ if $\Delta \gg \Gamma$-the "classical" (non-Mössbauer) resonance scattering of γ rays and Coulomb excitation of nuclei; 2) $\kappa = 1.5$ at $\Delta = \Gamma$-Mössbauer excitation; and 3) $\kappa = 2$ at $\Delta \ll \Gamma$-excitation by quasi-monochromatic line. Since the angle $\delta\theta$ is determined by the product of Ω and the average precession time of excited nuclei in a magnetic field, in keeping with the physical meaning, the aforementioned numbers, which coincide with the average arrival time of nuclei in the excited state $\bar{t}$, evidently indicate that this time depends on the way in which the nuclei are excited.

Vishnevskiĭ *et al.*[3] showed that the difference between the excitation of nuclei by a broad γ-ray spectrum ($\Delta \gg \Gamma$) and a narrow γ-ray spectrum ($\Delta = \Gamma$) can be explained qualitatively on the basis of the fact that a small characteristic time of the excitation process corresponds to the first case, whereas in the second case this value is comparable to τ.

An exponential decay of the excited states, which corresponds to the average lifetime τ, is realized under the conditions under which the excited nuclei emit a γ-ray spectrum of natural Lorentz shape with a width Γ during a much shorter time than τ. Such conditions are realized as a result of resonance excitation of nuclei by a broad γ-ray spectrum. If, however, the nuclei are excited by a Lorentz shape spectrum with a width $\Delta = \Gamma$, then the spectrum emitted by these nuclei can be described by the

 © 1980 American Institute of Physics

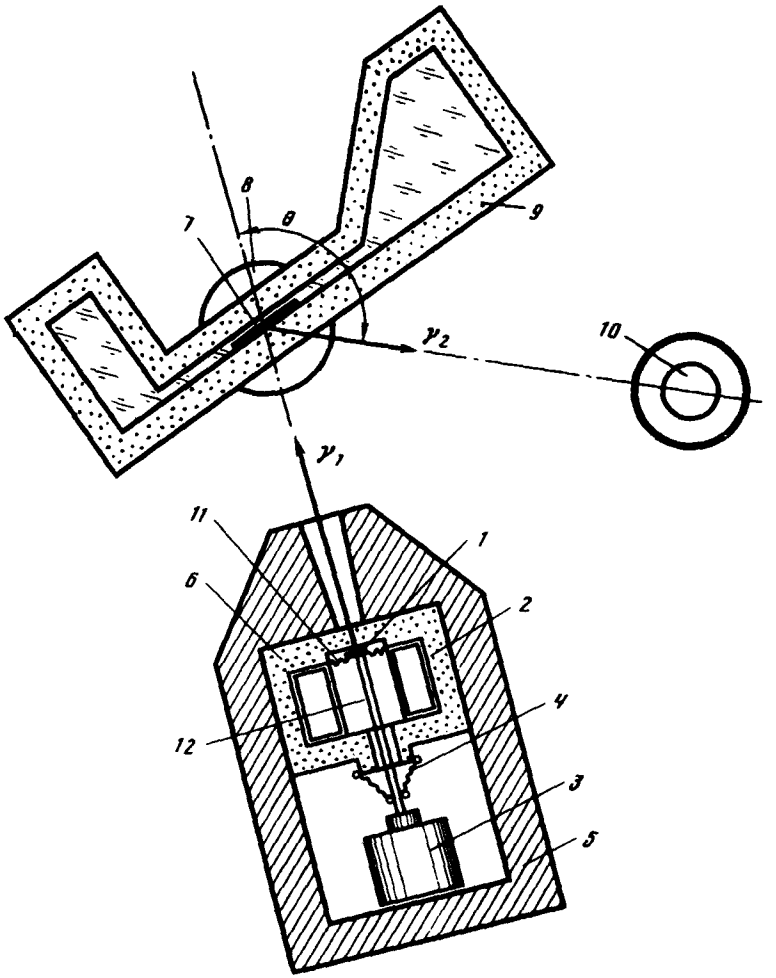

FIG. 1.

product of the two Lorentz functions. The characteristic width of such a spectrum is smaller than Γ, and $\bar{t}$ in this case is equal to 1.5 τ.

The *AD* of the 129.4-keV γ-ray quantum perturbed by the magnetic field an resonance scattered by ^{191}Ir nuclei as a result of excitation by means of Mössbauer effect were measured by us in the range of angles 78–143°. The experimental arrangement is shown in Fig. 1, where 1 is the ^{191}Os γ-ray source ~ 1 Ci in activity, which was obtained in the (n,γ) reaction; 2 and 9 are containers with liquid nitrogen; 3 is an electromagnetic vibrator which inititates by means of the rod 12 a $\leqslant$2.5-mm-amplitude vibration of the source mounted on the membrane 11; 4 is a rubber seal; 5 is the radiation shield; 6 is the thermal insulation; 7 is the scatterer–a plate made of a Fe alloy with 7 at.% Ir (natural isotopic composition) which, according to the data of x-ray structural analysis, has a bcc lattice. The internal magnetic field of the Ir nuclei, allowing for their concentration and temperature dependence,[4] is assumed to be (-1411.0 ± 5.4) kOe; 8 is the pole piece of an electromagnet which saturates the

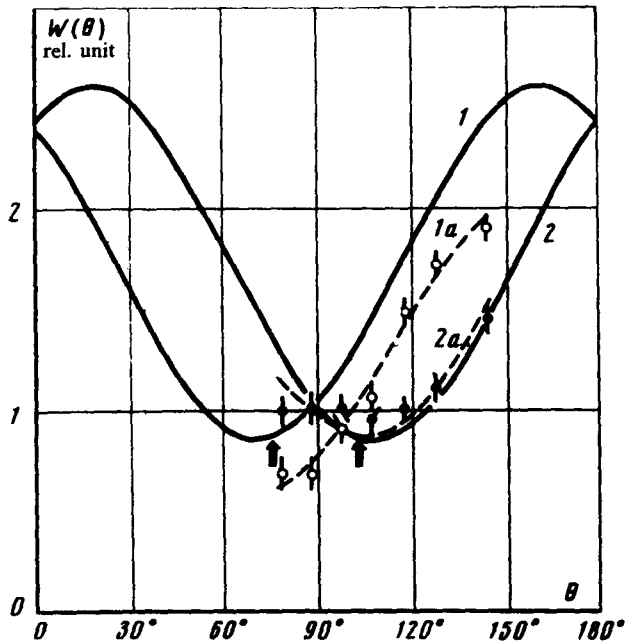

FIG. 2.

scatterer, at 1-kOe field in the gap, in the perpendicular direction to the scattering plane; 10 is a $\sim$30-cm^3-volume Ge (Li) detector which is stationary relative to the magnet in order to eliminate the influence on it of the variable magnetic field; the detector pulses were subjected to a pulse-height analysis using standard equipment; and y_1 and y_2 are the directions of the primary and scattered γ-ray beams. The scattering angle θ was varied by rotating the platform with the source. The number of resonance-scattered γ rays was determined from the difference in the detector counting for a fixed source and for an oscillating source. The fraction of resonance-scattered γ rays as compared with the Rayleigh scattered γ rays was in the range of 10 to 30% for different scattering angles. Figure 2 shows the obtained AD; the open circles pertain to the " + " pole sign and the dark circles refer to the " − " pole sign. The broken curves 1a and 2a represent the most probable AD which were calculated by using Eq. (33) of Ref. 3, with allowance for the geometry of γ-ray absorption in the scatterer and for the efficiency of the detector for the " + " field directions, respectively. The average value of the two g factors of the ^{191}Ir nucleus in the 129.4-keV state, which were determined by minimizing χ^2 by means of the standard BESM-6 computer programs, was $g = 0.197 \pm 0.018$. The averaging of the results of three measurements of the g factor of ^{191}Ir in the same state,[5] which were performed by using different methods, gives the value of $g = 0.199 \pm 0.014$, with allowance for the value $\tau = (1.753 \pm 0.085) \times 10^{-10}$ sec. The good agreement between this value and ours shows that allowance for Δ / Γ makes it possible to measure the g factor by using the described method without distorting it. The solid curves 1 and 2 were calculated from Eq. (33)[3] for two optimal values of the g factor. The normalizations of curves 1a and

2a are different from those of curves 1 and 2. The minimum of the unperturbed AD is located at $\theta = 90°$. The locations of this minimum after rotating the AD by an angle $\delta\theta = \Omega\tau$, which follows from the conventional theory of angular correlations and corresponds to the average precession time τ, are indicated by arrows for both field signs. It can be seen that the shift of the level of the perturbed AD, which are in total agreement with the results of the experiment, amounts to $\sim 1.4\ \Omega\tau$, which is close to the prediction of the theory for excitation conditions 2) This is direct evidence of the fact that under these conditions the average time the nuclei remain in the excited state is equal to $\sim 1.4\ \tau$.

Allowance for a possibility that the internal field is not parallel to the external field[6] increases to some extent both of the comparable values of the g factor, but does not alter the conclusion that the average time the nuclei remain in the excited state increases.

The authors thank S. N. Zubkov, A. M. Kotov, and L. Z. Fedulov for their assistance in building the facility.

[1]C. J. Goebel and K. W. McVoy, Phys. Rev. **148**, 1021 (1966).
[2]H. Eicher, Z. Phys. **212**, 176 (1968).
[3]T. N. Vishnevskii, A. V. Davydov, C. A. Lobov, and V. I. Povzun, Preprint ITEF-70, Moscow, 1974.
[4]G. N. Rao, At. Data Nucl. Data Tables **15**, 553 (1975); R. L. Mössbauer, M. Lengsfeld, W. Von Lieres, W. Potzel, P. Tescher, and F. E. Wagner, Z. Naturforsch. **26a**, 343 (1971); P. C. Riedi, Phys. Rev. **B8**, 5243 (1973).
[5]W. R. Ownes, B. L. Robinson, and S. Jha, Phys. Rev. **185**, 1555 (1969); R. Avida, L. Ben Zvi, P. Gilad, M. B. Goldberg, G. Goldring, K. H. Seidel, and A. Sprinzak, Nucl. Phys. **A147**, 200 (1970); R. B. Begzhanov, N. A. Il'khamdzhanov, K. T. Salikhbaev, and U. Yu. Yuldashev, Progr. and Proc. of 22 Conference on Nuclear Spectroscopy, Part I, p. 145, Nauka, Leningrad, 1972.
[6]K. S. Krane and W. A. Steyert, Phys. Rev. **C9**, 2063 (1974).