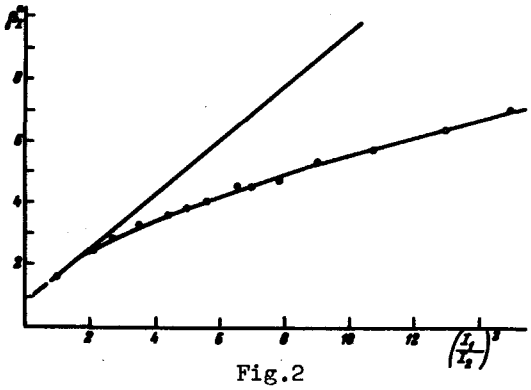

Fig.2

By measuring now $\Delta U_-/\Delta U_+$ in experiments with small ΔI, we determine $(\ell_1/2 + \beta)_1$, which turns out to range from 0.8 to 0.9. It can, in principle, be determined directly from probe measurements, provided $H_\perp$ is known exactly. The corresponding estimates are in good agreement.

Figure 2 shows the experimental plot of β_I^* vs. $(I_1/I_2)^2$. The straight line is calculated:

$$\beta_I^* = \frac{L_{ext}}{2} + \left(\frac{\ell_1}{2} + \beta_1\right)_1 (I_1/I_2)^2.$$

On the basis of the foregoing data we can conclude that although the energy in the plasma pinch is not fully conserved when a negative current pulse is applied, it is possible to obtain maximal $\beta_I^* \sim 7$. It has been shown with the aid of magnetic probes that there are no disturbances of magnetohydrodynamic type on the surface of the plasma pinch.

Further increase of $(I_1/I_2)^2$ leads to the appearance of such disturbances and to development of a "stalling" instability similar to that described in [6].

The available data do not allow us to ascertain whether this instability is connected with the attainment of the critical value of β_I^* or whether it constitutes a unique instability of the plasma pinch with a negative current flowing on the periphery. A definite answer will apparently be provided only by experiments with toruses having different slopes. It must be stated, nonethele-s, that the plasma pinch in the Tokamak can be stale also at large values of β_I^* approaching R/a. When it comes to β_I, this experiment still has a model character.

The author considers it his duty to thank V. D. Shafranov for valuable discussions.

[1] L. A. Artsimovich et al., Atomnaya energiya 22, 259 (1967).
[2] V. D. Shafranov, Zh. Eksp. Teor. Fiz. 37, 1088 (1959) [Sov. Phys.-JETP 10, 775 (1960)].
[3] E. P. Yurchenko, Zh.Tekh. Fiz. 37, 1458 (1967) [Sov. Phys.-Tech. Phys. 12, 1057 (1968)].
[4] L. A. Artsimovich, S. V. Mirnov, and V.S. Strelkov, Atomnaya energiya 17, 170 (1964).
[5] S. V. Mirnov, ibid. 17, 209 (1964).
[6] S. V. Mirnov, ibid. 26, 458 (1969).
[7] S. V. Mirnov, Nuclear Fusion 9, 57 (1969).

INVESTIGATION OF THE ROTATIONAL-VIBRATIONAL TRANSITION OF THE METHANE LINE FOR THE STABILIZATION OF AN He-Ne LASER FREQUENCY AT $\lambda = 3.39\ \mu$

N. G. Basov, M. V. Danileiko, and V. V. Nikitin
P.N. Lebedev Physics Institute, USSR Academy of Sciences
Submitted 16 June 1970
ZhETF Pis. Red. 12, No. 2, 95 - 97 (20 July 1970)

In [1 - 3] it was proposed to use the effect of saturation of the absorption of a low-pressure gas in the light field of a standing wave to obtain narrow power resonances within a Doppler line, and to stabilize against these resonances the frequency of a laser. Narrow power resonances in the saturation of the absorption of the P(7) rotational-vibrational transition of the ν_3 band of methane by He-Ne laser radiation at $\lambda = 3.39\ \mu$ were observed in a laser with a Fabry-Perot resonator [4, 5, 6] and in a laser with a ring resonator [6, 7]. The shift and broadening of the methane line by pressure, and also results on the reproducibility of the frequency of a laser stabilized against a power peak, are described in [8]. The amplifying medium used in [8] was the isotope Ne^{20}.

Our present purpose was to investigate experimentally the stability and reproducibility of the frequency of an He-Ne laser opwerating with the isotope Ne^{22} and stabilized against the narrow Lamb dip of the 2947.906 cm^{-1} line of methane. Since the line of the Ne^{22} isotope lies about 63 MHz closer to the methane absorption line than the line of Ne^{20} [9], a coincidence of the amplification and absorption lines can be obtained at lower pressures of the

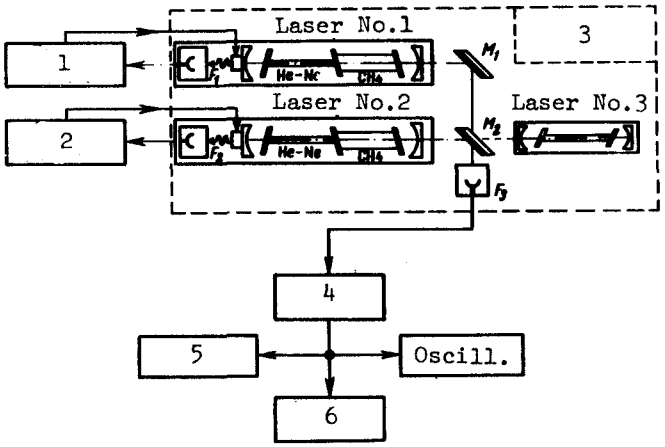

Fig. 1. Block diagram of experiment: 1 - stabilization system of laser No. 1, 2 - stabilization system of laser No. 2, 3 - shock-absorbing stand, 4 - amplifier, 5 - frequency meter, 6 - spectrum analyzer.

Fig. 2. Resonant-frequency drift after 20 min. The maximum frequency deviation does not exceed 3 kHz.

He-Ne^{22} mixture in the amplifying medium. This in turn makes it possible to eliminate the noise produced in the laser at high pressure, which affects adversely the frequency characteristics of the laser.

Figure 1 shows a block diagram of the experiment. The entire optical part of the setup, including lasers 1 and 2 with absorbing cell, laser 3, and also the photoreceivers F_1, F_2, and F_3 and the rotating dielectric mirrors M_1 and M_2 were rigidly mounted on a massive ($\sim$1 ton) shock-absorbing stand. The optical system was adjusted with the aid of laser No. 3. Lasers 1 and 2 had resonators approximately 55 cm long and were secured with invar tie rods; the amplifying and absorbing parts of the lasers were equal in length. To scan the laser frequency, one of the resonator mirrors was mounted on a piezoceramic. To prevent a mutual influence of the stabilization systems, the laser modulation frequencies were chosen to be 13 and 26 kHz for lasers 1 and 2, respectively.

From the piezoceramic side, the radiation of laser No. 1 (and analogously that of laser No. 2) went to photoreceiver F_1 and further to the stabilization system of laser No. 1. The control signal from the output of the stabilization system was fed to the piezoceramic.

On the other side, the laser beams were mixed with the aid of rotating mirrors M_1 and M_2 in photoreceiver F_3. The difference frequency was first amplified with a broadband amplifier and registered with an electronic frequency meter. The beat frequency could be observed simultaneously on the the oscilloscope screen and in the spectrum analyzer. An estimate of the instability of the difference frequency was obtained from the readings of the frequency meter at fixed time intervals (τ = 10 sec).

Figure 2 shows the drift of the difference frequency in 20 minutes. We see that the maximum frequency deviation in that time does not exceed 3 kHz, corresponding to a stability of about 10^{-11} for each laser. It should be noted that the instability over a time of a few hours did not exceed the above value.

From the point of view of reproducibility, it was of interest to investigate the influence of the discharge current of the amplifier tube, the misadjustment and tuning of lasers 1 and 2 in sequence, etc. We have found experimentally that the reproducibility is about 10^{-11}.

We are grateful to M. I. Vol'nov and A. L. Makarov for help with the work.

[1] V. S. Letokhov, ZhETF Pis. Red. 6, 597 (1967) [JETP Lett. 6, 101 (1967)].
[2] V. S. Letokhov, FIAN Preprint No. 135, 1967; Zh. Eksp. Teor. Fiz. 54, 1244 (1968) [Sov. Phys.-JETP 27, 665 (1968)].
[3] V. I. Lisitsyn and V.P. Chebotaev, ibid. 54, 419 (1968) [27, 227 (1968)].
[4] J. L. Hall, IEEE Journ. of QE, QE-4, No. 10 (1968).
[5] N. G. Basov, M. V. Danileiko, and V. V. Nikitin, Zh. Prikl. Spektr. 11, No. 3, 1969.
[6] E. M. Belenov, M. V. Danleiko, and V. V. Nikitin, FIAN Preprint No. 138, 1968.

[7] N. G. Basov, E. M. Belenov, M. V. Danileiko, and V. V. Nikitin, Zh. Eksp.Teor. Fiz. 57, 1991 (1969) [Sov. Phys.-JETP 30, 1079 (1970)].
[8] R. L. Barger and J. L. Hall, Phys. Rev. Lett. 22, No. 1, 1969.
[9] K. Sakurai, Y. Ueda, M. Takami, and K. Shimoda, J. Phys.Soc. Japan 21, 2090 (1966).

BIEXCITON IN Cu_2O CRYSTAL[1)]

E. F. Gross and F. I. Kreingold
A. F. Ioffe Physico-technical Institute, USSR Academy of Sciences; Leningrad State University
Submitted 17 June 1970
ZhETF Pis. Red. 12, No. 2, 98 - 100 (20 July 1970)

With an aim at thoroughly investigating the processes of formation and decay of biexcitons and the phenomena connected with the condensation of excitons in crystals, if such phenomena exist, we have undertaken an experimental investigation of the emission spectrum of the Cu_2O crystal at low temperatures in liquid helium at T = 2°K, and under optical excitation (mercury lamp DRSh-500), when one can expect an accumulation, up to high concentrations, of quadrupole excitons at the level n = 1 of the yellow [1] series of Cu_2O.

We chose Cu_2O for our experiments because the excitons in this crystal have a large binding energy and make it possible to perform in greater detail and with greater discrimination the investigation which we have undertaken. In fact, while the binding energy of the indirect exciton in germanium is W^{Ge}_{indir} = 4 meV, and that of the direct one is W^{Ge}_{dir} = 1.2 meV, the binding energies W^{Cu_2O} of the "yellow" [1] and "green"[2] excitons in Cu_2O are larger by two orders of magnitude than in Ge, namely $W^{Cu_2O}_{yel}$ = 140 meV and $W^{Cu_2O}_{gr}$ = 200 meV. It follows therefore that the higher levels of the excitons in Cu_2O (n = 2, 3, 4, 5, 6...) are likewise more widely spaced in energy than, say in the case of Ge, thus affording an opportunity of performing more detailed investigations.

In an earlier paper [3], we investigated the luminescence spectrum of Cu_2O at T = 4.2°K.

In the Cu_2O emission spectrum at T = 2°K we observed, in the red part of the spectrum, a series of new smeared and relatively weak lines converning in the long-wave (red) part of the spectrum and strongly dependent on the temperature: the new lines are seen at T = 2°K and vanish at T = 4.2°K. The first term of the series, n = 2, is distinctly seen; the higher terms, n = 3, 4, 5, and 6 are not so clearly seen, because they are obscured in the spectrum by the superimposed continuous Cu_2O continuous luminescence band of impurity or defect origin.

The frequencies ν'_n of the lines of the new red emission series of the Cu_2O satisfy well the serial hydrogenlike relation

$$\nu'_n = \nu'_\infty + \frac{R'}{n^2} = 15135 + \frac{1200}{n^2}\ \mathrm{cm}^{-1}, \quad n = 2, 3, 4, 5, 6. \tag{1}$$

where the Rydberg constant R' = 1200 cm^{-1} is equal to the Rydberg constant of the "green" exciton series in the Cu_2O absorption [2]:

$$\nu_n = \nu_\infty - \frac{R}{n^2} = 18587 - \frac{1200}{n^2}\ \mathrm{cm}^{-1}, \quad n = 2, 3, 4, 5 \ldots. \tag{2}$$

---

1)The results of this research were reported on 2 December 1969 at the Semiconductor Institute of the USSR Academy of Sciences in Leningrad, and on 28 May 1970 at the Solid State Institute to the All-union Seminar "Excitons in Crystals" in Chernogolovka (Moscow).